RAYSTAR

RAYSTAR Optronics, Inc.
曜凌光電股份有限公司

曜凌光電股份有限公司
Raystar Optronics, Inc.
42881台中市大雅區科雅路25號5樓
5F, No. 25, Keya Road, Daya Dist., Taichung City 42881, Taiwan
T：+886-4-2565-0761 | F：+886-4-2565-0760
sales@raystar-optronics.com | www.raystar-optronics.com

RFH70BA8-AYH-LNG

SPECIFICATION

CUSTOMER:

APPROVED BY	
PCB VERSION	
DATE	

FOR CUSTOMER USE ONLY

SALES BY	APPROVED BY	CHECKED BY	PREPARED BY

Release DATE:

TFT Display Inspection Specification: https://www.raystar-optronics.com/download/products.htm
Precaution in use of TFT module: https://www.raystar-optronics.com/download/declaration.htm

Revision History

VERSION	DATE	REVISED PAGE NO.	Note
0	2021/04/07		First issue
A	2021/04/15		Modify Touch Panel Information
B	2021/10/14		Modify IC information

RAYSTAR OPTRONICS

Contents

1.Module Classification Information

2.Summary

3.General Specifications

4.Interface

5.Contour Drawing

6.Absolute Maximum Ratings

7.Electrical Characteristics

8.Data Input Format For LVDS

9.Timing Characteristic

10.Optical Characteristics

11.Reliability

12.Touch Panel Information

13.Other

RAYSTAR OPTRONICS

1.Module Classification Information

R	F	H	70	BA8	-	A	Y	H	-	L	N	G
1	2	3	4	5	-	6	7	8	-	9	10	11

Item	Description	
1	R：Raystar Optronics Inc.	
2	Display Type：F→TFT Type, J→ Custom TFT	
3	Solution: A: 128x160 B:320x234 C:320x240 D:480x234 E:480x272 F:800x480 G:640x480 H:1024x600 I:320x480 J:240x320 K:1280x800 L:240x400 M:1024x768 N:128x128 O:480x800 P:640x320 Q:800x600 S:480x128 T:800x320	
4	Display Size：7.0” TFT	
5	Version Code.	
6	Model Type: A：TFT LCD E：TFT+FR+CONTROL BOARD J：TFT+FR+A/D BOARD N：TFT+FR+A/D BOARD+CONTROL BOARD S：TFT+FR+POWER BOARD (DC TO DC) 1：TFT+CONTROL BOARD	6：TFT+FR H：TFT+D/V BOARD I：TFT+FR+D/V BOARD B：TFT+POWER BD
7	Polarizer Type, Temperature range, View direction	I→Transmissive, W. T, 6:00 ; C→Transmissive, N. T, 6:00 L→Transmissive, W.T,12:00 ; F→Transmissive, N.T,12:00 Y→Transmissive,W.T, IPS TFT ; A→Transmissive, N.T, IPS TFT Z→Transmissive, W.T, O-TFT R→Transmissive, Super W.T, O-TFT N→Transmissive, Super W.T, 6:00; Q→Transmissive, Super W.T, 12:00 V→Transmissive, Super W.T, VA TFT
8	Backlight	W：LED, White / H：LED, High Light White F：CCFL, White
9	Driver Method	D: Digital A: Analog L：LVDS M:MIPI
10	Interface	N：without control board A：8Bit B：16Bit S:SPI Interface R: RS232 U:USB I: I2C
11	TS	N：Without TS S：resistive touch panel C：capacitive touch panel capacitive touch panel (G-F-F) G：capacitive touch panel(G-G)

RAYSTAR OPTRONICS

2.Summary

TFT 7.0”is a IPS transmissive type color active matrix TFT liquid crystal display that use amorphous silicon TFT as switching devices. This module is a composed of a TFT LCD module, It is usually designed for industrial application and this module follows RoHs.

RAYSTAR OPTRONICS

3.General Specifications

- Size: 7.0 inch
- Dot Matrix: 1024 x RGBx600(TFT) dots
- Module dimension: 169.9(W) x 103.4(H) x 7.3(D) mm
- Active area: 154.2144 x 85.92 mm
- Pixel pitch: 0.1506 x 0.1432 mm
- LCD type: TFT, Normally Black, Transmissive
- Viewing Angle: 85/85/85/85
- Aspect Ratio: 16:9
- Controller IC: NA
- Driver IC: ST5021 + ST5651 or equivalent
- CTP IC: ILI2130 or Equivalent
- CTP Interface: I2C
- CTP FW Version: 0x07.0x00.0x00.0x00.0x65.0x90.0x00.0x01
- CTP Resolution:16384*16384
- Backlight Type: LED, Normally White
- With /Without TP: With CTP
- Interface: LVDS
- Surface: Glare

*Color tone slight changed by temperature and driving voltage.

RAYSTAR OPTRONICS

4.Interface

4.1. LCM PIN Definition

Pin No.	Symbol	I/O	Function	Remark
1	VCOM	P	Common Voltage	
2	VDD	P	Digital circuit	
3	VDD	P	Digital circuit	
4	NC	---	No connection	
5	RESET	I	Global reset pin	
6	STBYB	I	Standby mode, Normally pulled high STBYB = “1”, normal operation STBYB = “0”, timing controller, source driver will turn off, all output are High-Z	
7	GND	P	Ground	
8	RXIN0-	I	Negative LVDS differential data input	
9	RXIN0+	I	Positive LVDS differential data input	
10	GND	P	Ground	
11	RXIN1-	I	Negative LVDS differential data input	
12	RXIN1+	I	Positive LVDS differential data input	
13	GND	P	Ground	
14	RXIN2-	I	Negative LVDS differential data input	
15	RXIN2+	I	Positive LVDS differential data input	
16	GND	P	Ground	
17	RXCLKIN-	I	Negative LVDS differential clock input	
18	RXCLKIN+	I	Positive LVDS differential clock input	
19	GND	P	Ground	
20	RXIN3-	I	Negative LVDS differential data input	
21	RXIN3+	I	Positive LVDS differential data input	
22	GND	P	Ground	
23	NC	---	No connection	
24	NC	---	No connection	
25	GND	P	Ground	
26	NC	---	No connection	
27	NC	---	No connection	
28	SELB	I	6bit/8bit mode select H:6bit / L:8bit	

RAYSTAR OPTRONICS

29	AVDD	P	Power for Analog Circuit	
30	GND	P	Ground	
31	LED-	P	LED Cathode	
32	LED-	P	LED Cathode	
33	L/R	I	Horizontal inversion	
34	U/D	I	Vertical inversion	
35	VGL	P	Negative power for TFT	
36	NC	---	No connection	
37	NC	---	No connection	
38	VGH	P	Positive power for TFT	
39	LED+	P	LED Anode	
40	LED+	P	LED Anode	

I:input ,O:output,P:power
Note:
When L/R=”0”,set right to left scan direction.
When L/R=”1”,set left to right scan direction.
When U/D=”0”,set top to bottom scan direction.
When U/D=”1”,set bottom to top scan direction.

4.2. CTP PIN Definition

Pin	Symbol	Function	Remark
1	VSS	Ground for analog circuit	
2	VDDT	Power Supply : +3.3V	
3	SCL	I2C clock input	
4	NC	No connect	
5	SDA	I2C data input and output	
6	NC	No connect	
7	/RST	External Reset, Low is active	
8	NC	No connect	
9	/INT	External interrupt to the host	
10	VSS	Ground for analog circuit	

RAYSTAR OPTRONICS

5.Contour Drawing

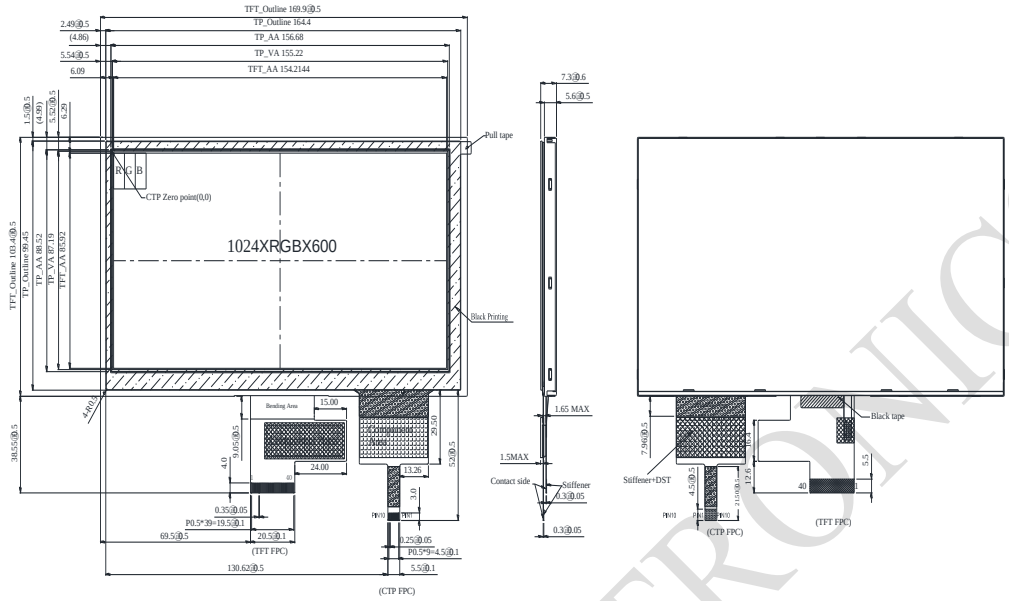

CTP FPC

PIN NO.	SYMBOL
1	VSS
2	VDDT
3	SCL
4	NC
5	SDA
6	NC
7	/RST
8	NC
9	/INT
10	VSS

TFT FPC

PIN NO	SYMBOL
1	VCOM
2	VDD
3	VDD
4	NC
5	RESET
6	STBYB
7	GND
8	RXIN0-
9	RXIN0+
10	GND
11	RXIN1-
12	RXIN1+
13	GND
14	RXIN2-
15	RXIN2+
16	GND
17	RXCLKIN-
18	RXCLKIN+
19	GND
20	RXIN3-
21	RXIN3+
22	GND
23	NC
24	NC
25	GND
26	NC
27	NC
28	SELB
29	AVDD
30	GND
31	LED-
32	LED-
33	L/R
34	U/D
35	VGL
36	NC
37	NC
38	VGH
39	LED+
40	LED+

The non-specified tolerance of dimension is ±0.3mm.

RAYSTAR OPTRONICS

6.Absolute Maximum Ratings

Item	Symbol	Min	Typ	Max	Unit
Operating Temperature	TOP	-20	—	+70	□
Storage Temperature	TST	-30	—	+80	□

Note: Device is subject to be damaged permanently if stresses beyond those absolute maximum ratings listed above

1. Temp. □60□, 90% RH MAX. Temp.＞60□, Absolute humidity shall be less than 90% RH at 60□

RAYSTAR OPTRONICS

7.Electrical Characteristics

7.1. Typical Operation Conditions

Item	Symbol	Values			Unit	Remark
		Min.	Typ.	Max.		
Power voltage	VDD	3.0	3.3	3.6	V	
Supply CTP	VDDT	3.0	3.3	3.6	V	
	I_{CTP}	—	65	98	mA	
Analog Power	AVDD	8.9	9.0	9.1	V	
TFT Gate ON Voltage	VGH	17	18	19	V	Note1
TFT Gate OFF Voltage	VGL	-6.5	-6.0	-5.5	V	Note2
TFT Common Voltage	Vcom	3.0	3.15	3.3	V	Note3
Current for Driver	IDD	-	14	21	mA	VDD=3.3V
Power Current	IAVDD	-	25	-	mA	AVDD=9V
TFT Gate ON Current	IVGH	-	1	-	mA	VGH=18V
TFT Gate OFF Current	IVGL	-	1	-	mA	VGL=6V
TFT Common Current	IVCOM	-	1	-	mA	VCOM=3.15V

Note 1. VGH is TFT Gate operating Voltage.
Note 2. VGL is TFT Gate operating Voltage.
The storage structure of this model is CST (Storage on Common)
Note 3. Vcom must be adjusted to optimize display quality Crosstalk, Contrast Ratio and etc.

RAYSTAR OPTRONICS

7.2. Backlight Driving Conditions

Item	Symbol	Values			Unit	Remark
		Min.	Typ.	Max.		
Voltage for LED backlight	VL	16.8	19.2	21.0	V	Note 1
Current for LED backlight	IL	--	290	--	mA	
LED life time	-	-	50,000	-	Hr	Note 2

Note 1 : There are 1 Groups LED

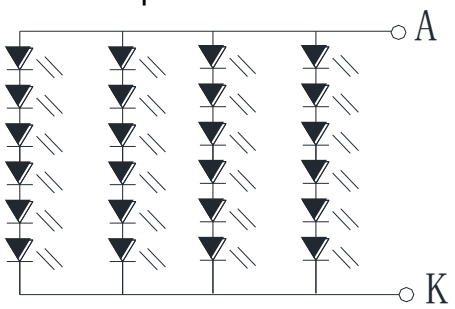

Backlight 24LED Circuit

Note 2 : Ta = 25 ℃
Note 3 : Brightness to be decreased to 50% of the initial value
Note 4 : The single LED lamp case

RAYSTAR OPTRONICS

8.Data Input Format For LVDS

8 bit LVDS input(HSD=”L”)

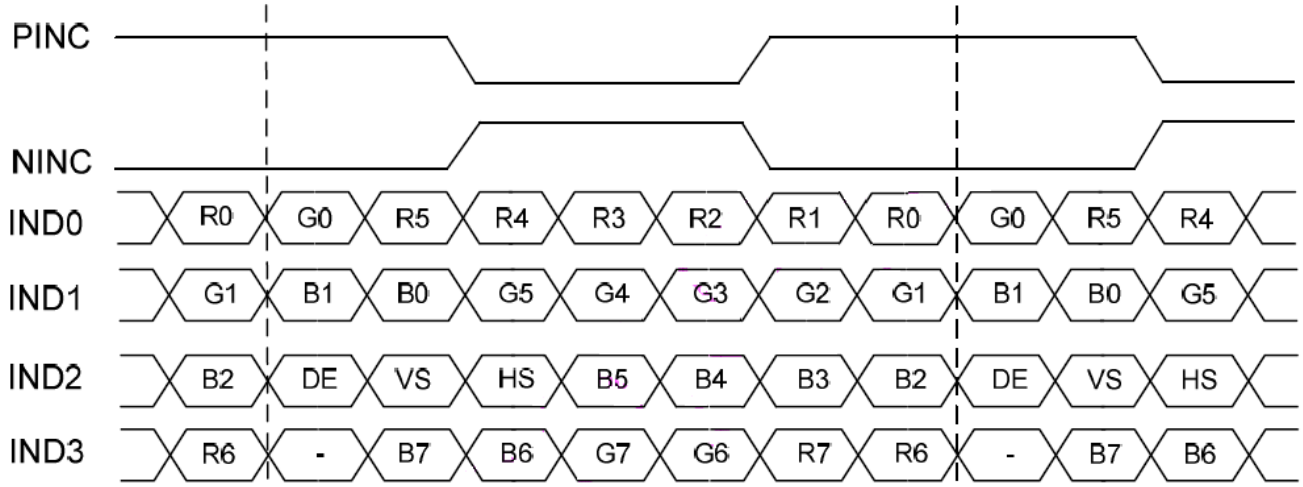

RAYSTAR OPTRO

9.Timing Characteristic

9.1. For 1024x600 panel

MODE="H" : DE mode

Parameter	Symbol	Value			Unit
		Min.	Typ.	Max.	
CLKIN frequency@ Frame rate = 60Hz	fclk	40.8	51.2	67.2	MHz
Horizontal display area	thd		1024		CLKIN
1 Horizontal Line	th	1114	1344	1400	
HSD Blanking	thb+thfp	90	320	376	
Vertical display area	tvd		600		H
1 vertical Line	tv	610	635	800	
VSD Blankking	tvb+tvfp	10	35	200	

MODE="L" : SYNC mode

Horizontal input timing

Parameter	Symbol	Value			Uint
		Min.	Typ.	Max.	
CLKIN frequency@ Frame rate = 60Hz	fclk	44.9	51.2	63	MHz
Horizontal display area	thd		1024		CLKIN
1 Horizontal Line	th	1200	1344	1400	
HSD pulse width	thpw	1	-	140	
HSD Blanking	thb		160		
HSD Front Porch	thfp	16	160	216	

Vertical input timing

Parameter	Symbol	Value			Uint
		Min.	Typ.	Max.	
Vertical display area	tvd		600		H
VSD period time	tv	624	635	750	
VSD pulse width	tvpw	1	-	20	
VSD Blanking	tvb		23		
VSD Front Porch	tvfp	1	12	127	

9.2. DC Electrical Characteristics
(VDD=2.3~3.6V, VDDA=8~13.5V, GND=GNDA=0V, TA=-20~85℃)

LVDS mode(Receiver Differential Input：PIND0~PIND3 , NIND0~NIND3 , PINC , NINC)

Parameter	Symbol	Min	Typ.	Max.	Unit	Conditions
Differential input high threshold voltage	R_{xVTH}			0.1	V	R_{xVCM} = 1.2V
Differential input low threshold voltage	R_{xVTL}	-0.1			V	
Input voltage range (singled-end)	R_{xVIN}	0		2.4	V	
Differential input common mode voltage	R_{xVCM}	$\lvert V_{ID} \rvert /2$		$2.4-\lvert V_{ID} \rvert /2$	V	
Differential input voltage	$\lvert V_{ID} \rvert$	0.2		0.6	V	
Differential input leakage current	RV_{xliz}	-10		10	uA	
LVDS Digital Operating Current	Iddlvds	-	40	50	mA	Fclk=65 MHz , VDD=3.3V
LVDS Digital Stand-by Current	Istlvds	-	10	50	uA	Clock & all functions are stopped

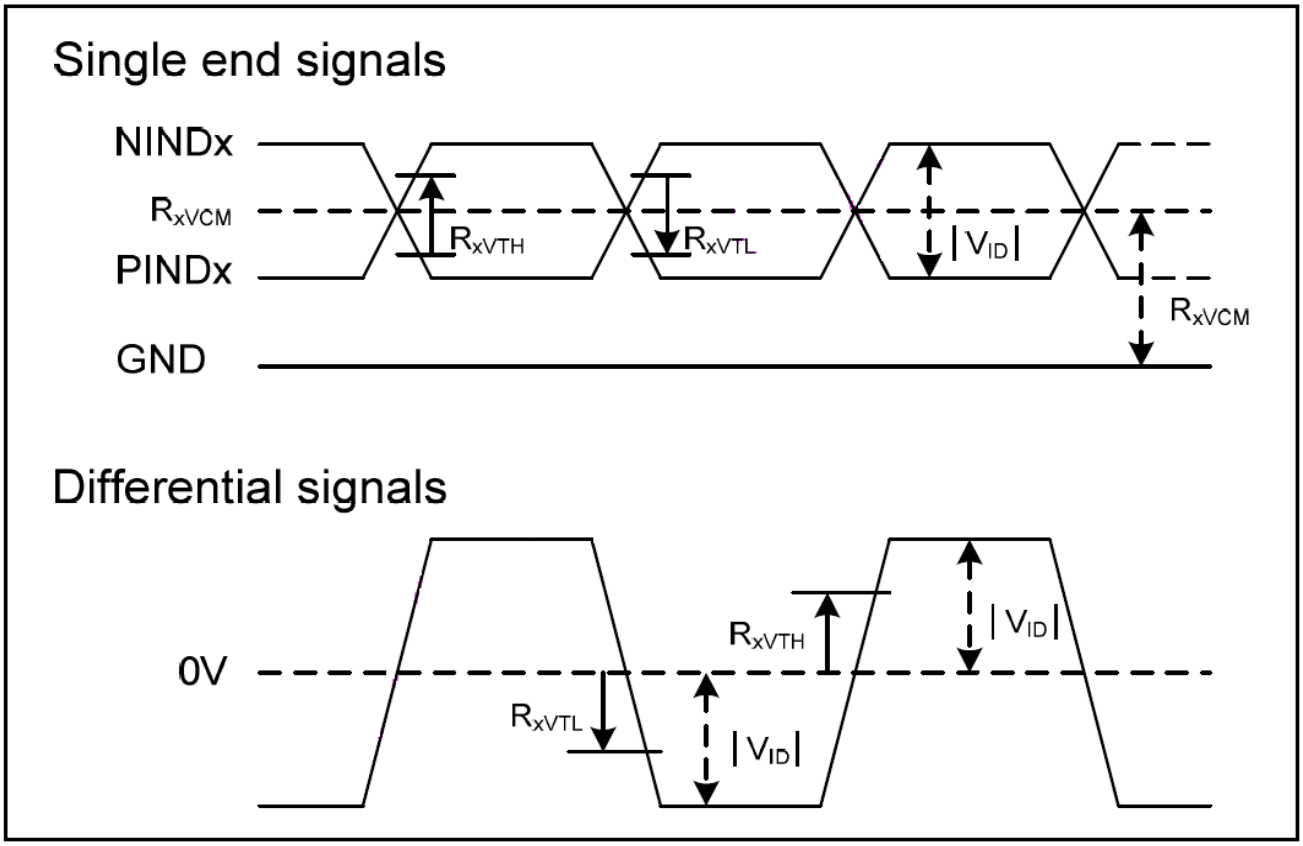

Power Circuit

Parameter	Symbol	Min	Typ.	Max.	Unit	Conditions
VCOM buffer input voltage	VCOMI	1.5		VDDA-0.15	V	
VCOM buffer output voltage	VCOMO	VCOMI-0.2	VCOMI	VCOMI+0.2	V	
VCOM buffer output current	IVCOM	-	-	10	mA	VCOMO = 5V VS 4.9V

10.Optical Characteristics

Item		Symbol	Condition.	Min	Typ.	Max.	Unit	Remark
Response time		Tr	θ=0°、Φ=0°	-	13	20	.ms	Note 3
		Tf		-	15	25		
Contrast ratio		CR	At optimized viewing angle	600	800	-	-	Note 4
Color Chromaticity	White	Wx	θ=0°、Φ=0	0.269	0.319	0.369	-	Note 2,5,6
		Wy		0.291	0.341	0.391	-	
Viewing angle	Hor.	ΘR	CR≧10	80	85	-	Deg.	Note 1
		ΘL		80	85	-		
	Ver.	ΦT		80	85	-		
		ΦB		80	85	-		
Brightness		-	-	800	850	-	cd/m²	Center of display
Uniformity		(U)	-	75	-	-	%	Note 5

Ta=25±2℃,

Note 1: Definition of viewing angle range

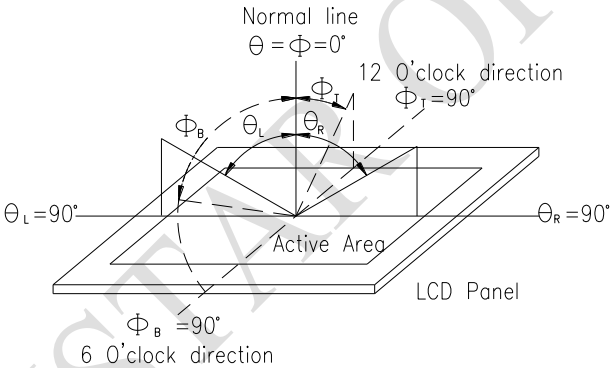

Fig. 10.1. Definition of viewing angle

Note 2: Test equipment setup:

After stabilizing and leaving the panel alone at a driven temperature for 10 minutes, the measurement should be executed. Measurement should be executed in a stable, windless, and dark room. Optical specifications are measured by Topcon BM-7orBM-5 luminance meter 1.0° field of view at a distance of 50cm and normal direction.

RAYSTAR OPTRONICS

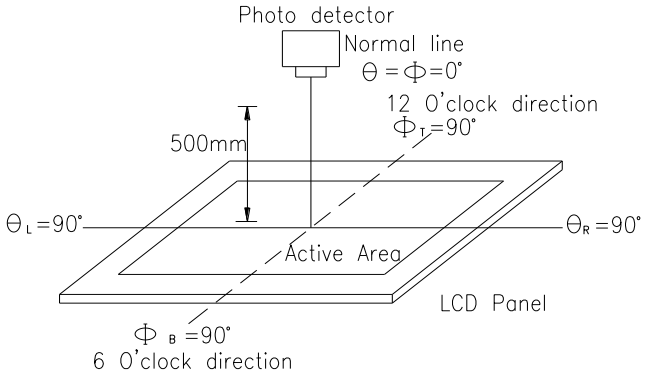

Fig. 10.2. Optical measurement system setup

Note 3: Definition of Response time:
The response time is defined as the LCD optical switching time interval between “White” state and “Black” state. Rise time, Tr, is the time between photo detector output intensity changed from 90%to 10%. And fall time, Tf, is the time between photo detector output intensity changed from 10%to 90%

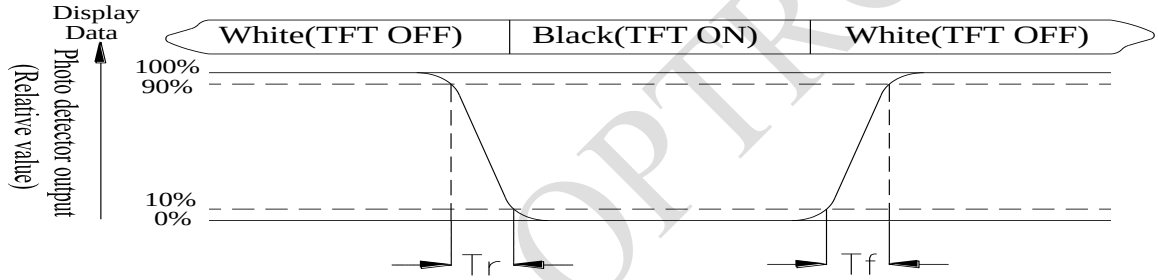

Note 4: Definition of contrast ratio:
The contrast ratio is defined as the following expression.

$$\text{Contrast ratio (CR)} = \frac{\text{Luminance measured when LCD on the "White" state}}{\text{Luminance measured when LCD on the "Black" state}}$$

RAYSTAR OPTRONICS

Note 5: Definition of Luminance Uniformity
Active area is divided into 9 measuring areas (reference the picture in below). Every measuring point is placed at the center of each measuring area.
Luminance Uniformity (U) = Lmin/Lmax x100%
L = Active area length
W = Active area width

Fig 10.3. Definition of uniformity

Note 6: Definition of color chromaticity (CIE 1931)
Color coordinates measured at the center point of LCD

Note 7: Measured at the center area of the panel when all the input terminals of LCD panel are electrically opened.

RAYSTAR OPTRONICS

11.Reliability

Content of Reliability Test (Wide temperature, -20□~70□)

Environmental Test			
Test Item	**Content of Test**	**Test Condition**	**Note**
High Temperature storage	Endurance test applying the high storage temperature for a long time.	80□ 200hrs	2
Low Temperature storage	Endurance test applying the low storage temperature for a long time.	-30□ 200hrs	1,2
High Temperature Operation	Endurance test applying the electric stress (Voltage & Current) and the thermal stress to the element for a long time.	70□ 200hrs	——
Low Temperature Operation	Endurance test applying the electric stress under low temperature for a long time.	-20□ 200hrs	1
High Temperature/ Humidity Operation	The module should be allowed to stand at 60□,90%RH max	60□,90%RH 96hrs	1,2
Thermal shock resistance	The sample should be allowed stand the following 10 cycles of operation -20□ 25□ 70□ 30min 5min 30min 1 cycle	-20□/70□ 10 cycles	——
Vibration test	Endurance test applying the vibration during transportation and using.	Total fixed amplitude : 1.5mm Vibration Frequency : 10~55Hz One cycle 60 seconds to 3 directions of X,Y,Z for Each 15 minutes	3
Static electricity test	Endurance test applying the electric stress to the terminal.	VS=±600V(contact) ,±800v(air), RS=330Ω CS=150pF 10 times	——

Note1: No dew condensation to be observed.

Note2: The function test shall be conducted after 4 hours storage at the normal Temperature and humidity after remove from the test chamber.

Note3: The packing have to including into the vibration testing.

RAYSTAR OPTRONICS

12.Touch Panel Information

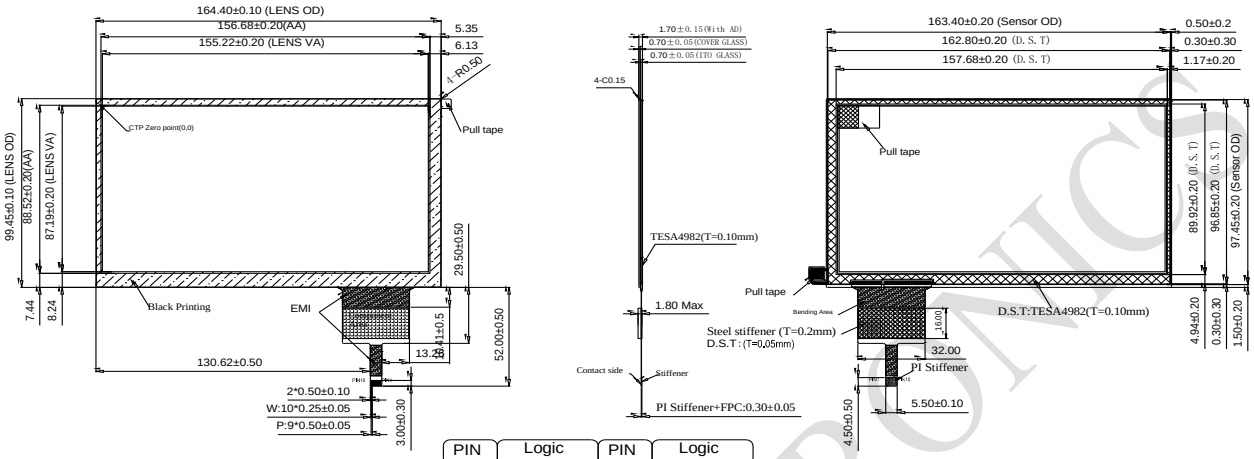

PIN	Logic	PIN	Logic
1	VSS	6	NC
2	VDDT	7	/RST
3	SCL	8	NC
4	NC	9	/INT
5	SDA	10	VSS

RAYSTAR OPTRONICS

12.1. I2C AC Characteristics

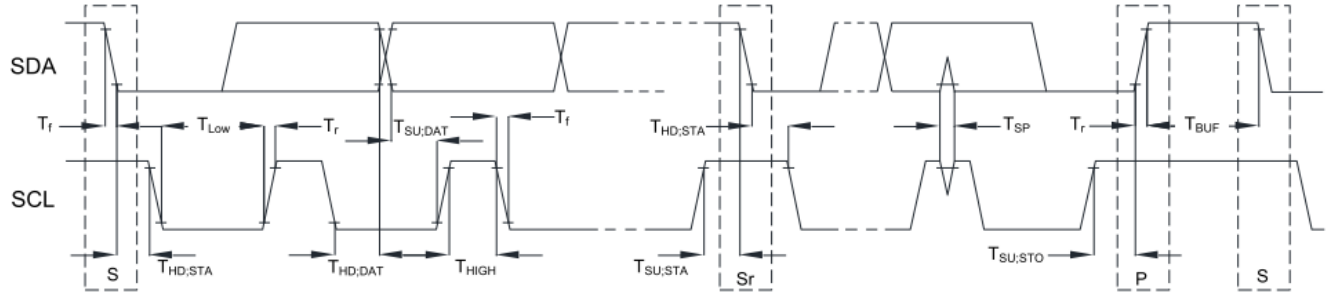

Item	Symbol	100kHz		400kHz		Unit
		Min.	Max.	Min.	Max.	
SCL standard mode clock frequency	FSCL	0	100	0	400	kHz
Hold time (repeated) START condition. After this period, the first clock is generated.	THD;STA	4	--	0.6	--	us
LOW period of the SCL clock	TLOW	4.7	--	1.3	--	us
HIGH period of the SCL clock	THIGH	4	--	0.6	--	us
Setup time for a repeat START condition.	TSU;STA	4.7	--	0.6	--	us
Data hold time	THD;DAT	0	3.45	0	0.9	us
Data setup time	TSU;DAT	250	--	100	--	ns
Rising time of both SDA and SCL signals	Tr	--	1000	--	300	ns
Falling time of both SDA and SCL signals	Tf	--	300	--	300	ns
Setup time for STOP condition.	TSU;STO	4	--	0.6	--	us
Free time between STOP and START condition	TBUF	4.7	--	1.3	--	us
Pulse width of spikes which must be suppressed by input filter	TSP	--	--	0	50	ns

12.2. Power On Sequence

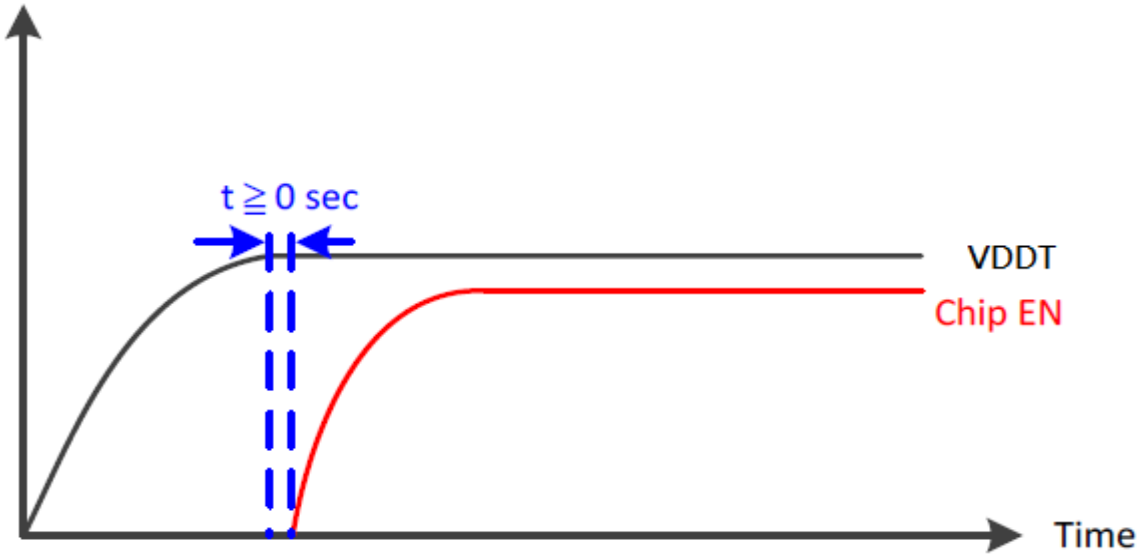

12.3. Power Off to Power On Sequence

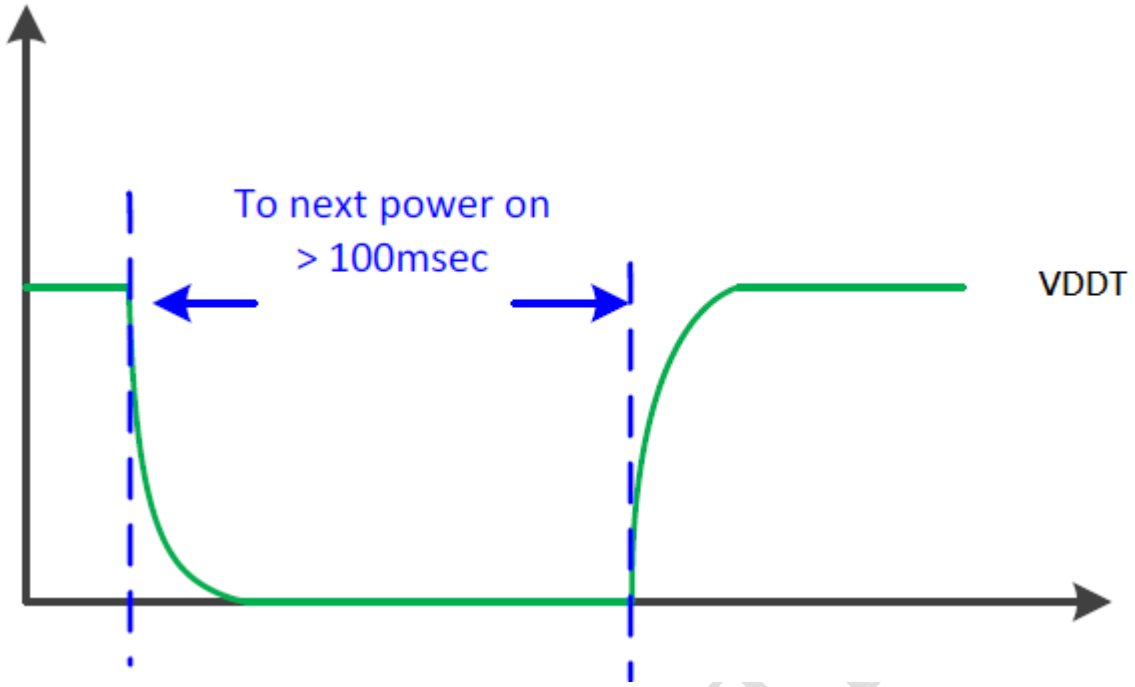

RAYSTAR OPTICS

Page: 1

LCM Sample Estimate Feedback Sheet		
Module Number：_____		
1、Panel Specification：		
1. Panel Type：	□ Pass	□ NG ,_____
2. View Direction：	□ Pass	□ NG ,_____
3. Numbers of Dots：	□ Pass	□ NG ,_____
4. View Area：	□ Pass	□ NG ,_____
5. Active Area：	□ Pass	□ NG ,_____
6.Operating Temperature：	□ Pass	□ NG ,_____
7.Storage Temperature：	□ Pass	□ NG ,_____
8.Others：_____		
2、Mechanical Specification：		
1. PCB Size：	□ Pass	□ NG ,_____
2.Frame Size：	□ Pass	□ NG ,_____
3.Materal of Frame：	□ Pass	□ NG ,_____
4.Connector Position：	□ Pass	□ NG ,_____
5.Fix Hole Position：	□ Pass	□ NG ,_____
6.Backlight Position：	□ Pass	□ NG ,_____
7. Thickness of PCB：	□ Pass	□ NG ,_____
8. Height of Frame to PCB：	□ Pass	□ NG ,_____
9.Height of Module：	□ Pass	□ NG ,_____
10.Others：	□ Pass	□ NG ,_____
3、Relative Hole Size：		
1.Pitch of Connector：	□ Pass	□ NG ,_____
2.Hole size of Connector：	□ Pass	□ NG ,_____
3.Mounting Hole size：	□ Pass	□ NG ,_____
4.Mounting Hole Type：	□ Pass	□ NG ,_____
5.Others：	□ Pass	□ NG ,_____
4、Backlight Specification：		
1.B/L Type：	□ Pass	□ NG ,_____
2.B/L Color：	□ Pass	□ NG ,_____
3.B/L Driving Voltage (Reference for LED Type)：□ Pass □ NG ,_____		
4.B/L Driving Current：	□ Pass	□ NG ,_____
5.Brightness of B/L：	□ Pass	□ NG ,_____
6.B/L Solder Method：	□ Pass	□ NG ,_____
7.Others：	□ Pass	□ NG ,_____

>> **Go to page 2** <<

RAYSTAR OPTRONICS

Module Number：_____

5、Electronic Characteristics of Module：

1.Input Voltage：	□ Pass	□ NG ,_____
2.Supply Current：	□ Pass	□ NG ,_____
3.Driving Voltage for LCD：	□ Pass	□ NG ,_____
4.Contrast for LCD：	□ Pass	□ NG ,_____
5.B/L Driving Method：	□ Pass	□ NG ,_____
6.Negative Voltage Output：	□ Pass	□ NG ,_____
7.Interface Function：	□ Pass	□ NG ,_____
8.LCD Uniformity：	□ Pass	□ NG ,_____
9.ESD test：	□ Pass	□ NG ,_____
10.Others：	□ Pass	□ NG ,_____

6、Summary：

Sales signature：_____

Customer Signature：_____ **Date**： / /

RAYSTAR OPTRONICS